**Manitoba Clean Environment Commission**

**Hearing for the Vivian Silica Sand Extraction Project (Project)**

**Sio Silica Corporation (SSC) Responses to Information Requests (IRs) Round No. 2**

**Appendix A**

Equipment Example – Dewatering Screen

DLN – IR – 003(1)

**Example of Primary Dewatering Screen**

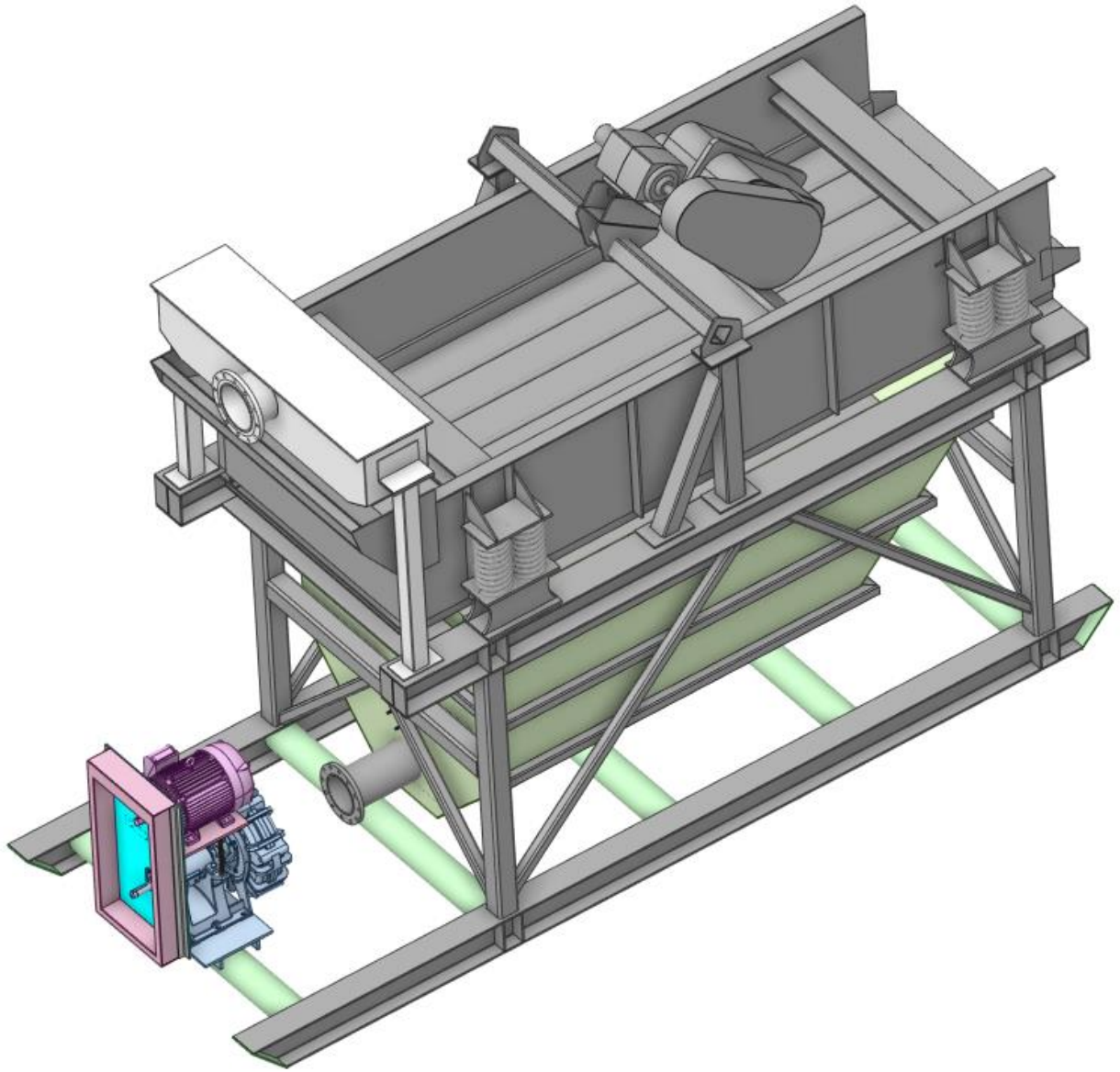

**Example only**

**Manitoba Clean Environment Commission**

**Hearing for the Vivian Silica Sand Extraction Project (Project)**

**Sio Silica Corporation (SSC) Responses to Information Requests (IRs) Round No. 2**

**Appendix B**

Crystalline Quartz Lab Result

DLN – IR – 006(14)

# BULK XRD ANALYSIS AND CRYSTAL STRUCTURE REFINEMENT OF QUARTZ USING RIETVELD METHOD

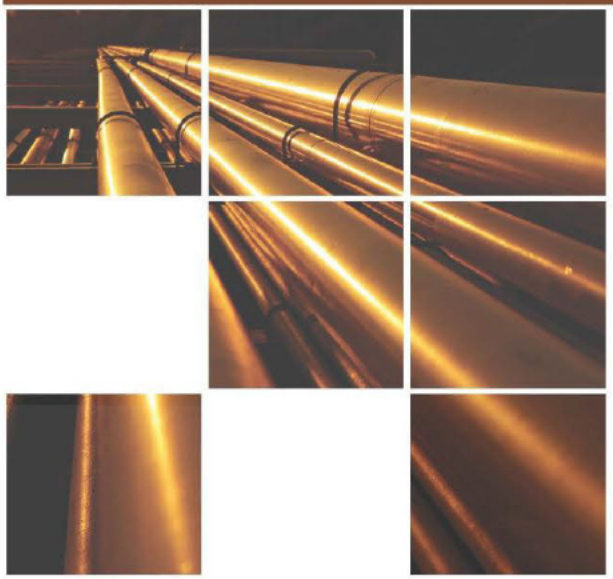

**Company: CanWhite Sands**

[redacted]

**Date: December, 2021**

**AGAT Geology Department**
**2730 39 Ave NE**
**Calgary, Alberta T1Y 7H6**

AGAT Laboratories

Service Beyond Analysis

# Bulk XRD Analysis and Crystal Structure Refinement of Quartz

**Introduction:** One sand sample was received by the AGAT Laboratories Geology Department for powder X-ray Diffraction (XRD) analysis with crystal structure refinement of quartz using Rietveld Method.

**Sample Preparation:** The sample was grinded using an agate mortar and pestle until the grain sizes reached less than about 10 μm. The powder sample was then scanned using an X-ray diffractometer.

**X-Ray Data Collection and Analysis:**

| | |
|---|---|
| Diffractometer Name: | Bruker D4 Endeavor XRD with a Lynx-Eye detector |
| Instrumental Parameters: | Radiation source – Cobalt (Co) |
| | Generator settings – 40 mA, 45 kV |
| | Goniometer primary radium (mm) – 200.5 |
| | Goniometer secondary radium (mm) – 200.5 |
| | Receiving slit width (mm) – 0.0734 |
| | FDS angle (°) – 0.3 |
| | Start position [°2θ] – 4 (*d* = 25.6 Å) |
| | End position [°2θ] – 80 (*d* = 1.39 Å) |
| | Step size [°2θ] - 0.02 |
| | Scan step time [s] - 1 |
| Data Analysis: | ICDD PDF-4 Mineral 2022 powder diffraction database |
| | X'PERT HighScore Software for mineral identification |
| | TOPAS program for quantitative phase analysis and crystal structure refinement |

**Quantitative minerals analysis:** Using HighScore program, the different mineral phases of the XRD pattern were identified. Once the mineral phases were identified, Rietveld refinement was performed by importing the trace patterns into TOPAS 5. This program (TOPAS 5) is used for Rietveld analysis to quantify the mineralogy. The XRD results are given in **Table 1**.

**Table 1**: Results of quantitative mineral analysis (relative weight %) of X-ray diffraction data for sample 1 [WASH A] using Rietveld method

| [redacted] | [redacted] | [redacted] | [redacted] |
|---|---|---|---|
| [redacted] | [redacted] | [redacted] | [redacted] |
| [redacted] | [redacted] | [redacted] | [redacted] |
| [redacted] | [redacted] | [redacted] | [redacted] |
| [redacted] | | | [redacted] |

**Remark:** The XRD results indicate that this sample consists almost entirely of quartz, with trace amounts of clays (kaolinite and illite). The peak profiles and background of the XRD pattern indicate that the sample is fully crystalline.

[redacted]

**References:**

Hill, R.J. and Howard, C.J. (1987) Quantitative phase analysis from neutron powder diffraction data using the Rietveld Method. J. Appl. Cryst., 20, 467-474.

Smith, G.S. and Alexander L.E. (1963) Refinement of the atomic parameters of alpha-quartz. Acta Crystallogr. 16, 462.

Rietveld, H.M. (1967): Line profiles of neutron powder-diffraction peaks for structure refinement. Acta Cryst., 22, 151-152.

Rietveld, H.M. (1969). A profile refinement method for nuclear and magnetic structures. Journal of Applied Crystallography, 2, 65-71.